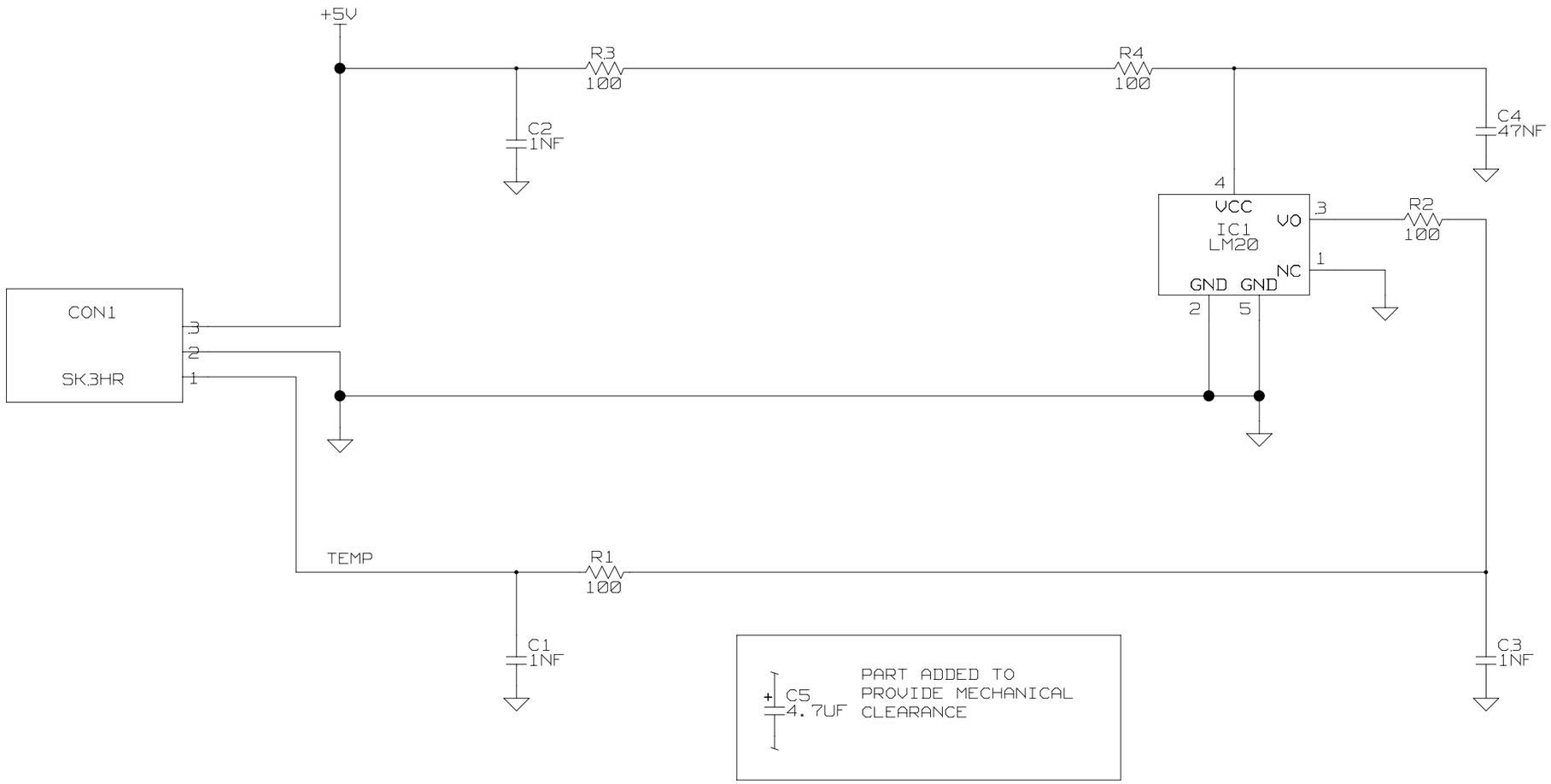

REV/ISS	AMENDMENTS	DRAWN	CHKD	D.O.	APVD	DATE
A4B	UPDATED OUTTOENG DIRECTORY ONLY	BAM	OW			11/11/03
A4A	CHANGED PER DCO 02004-004	BAM	OW			05/07/03
03B	CHANGED PER DCO 02004-004	BAM	OW			29/04/03
03A	CHANGED PER DCO 02004-003	BAM	OW	SA	OW	11/04/03

© TAIT ELECTRONICS A3

T8000
AMBIENT TEMPERATURE SENSOR

IPN:	ISSUE:	VARIANT NUMBER:
220-02004-04	04B	?

FILE DATE: Thu Aug 14 14:46:52 2003

ENGINEER:	FILE NAME:	SHEET NUMBER:
Owen Witheford	220_02004	1 OF 1